Drg No. E-69G1-01

REMOVE ALL BURRS AND SHARP EDGES.

THIRD ANGLE PROJECTION.

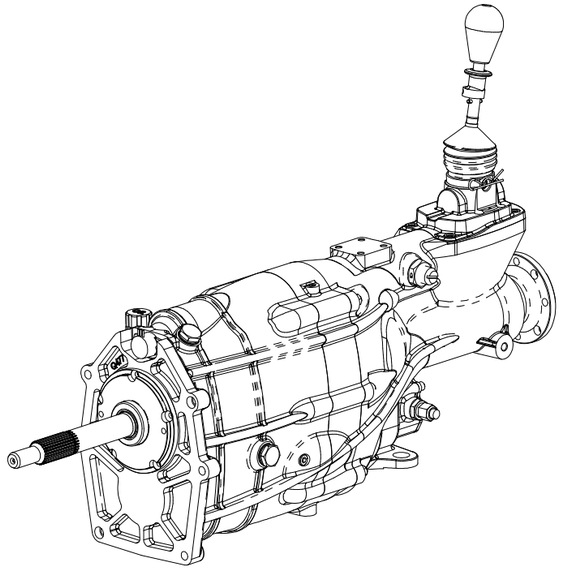

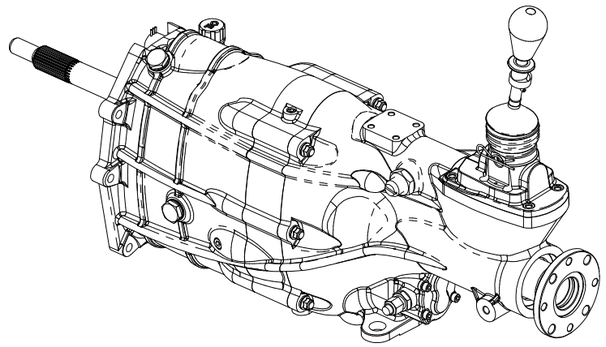

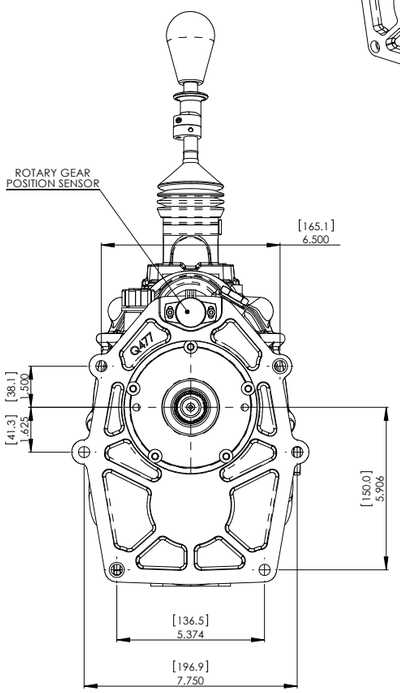

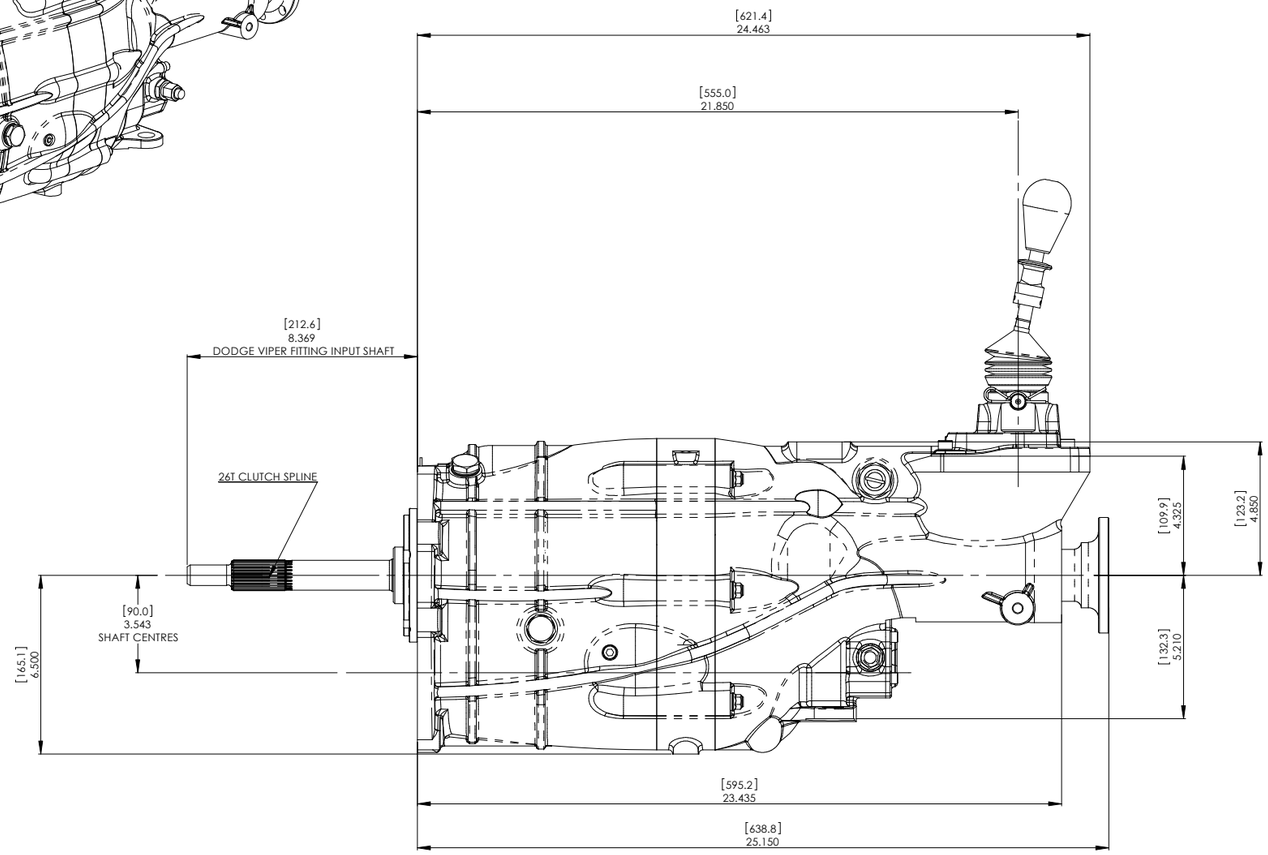

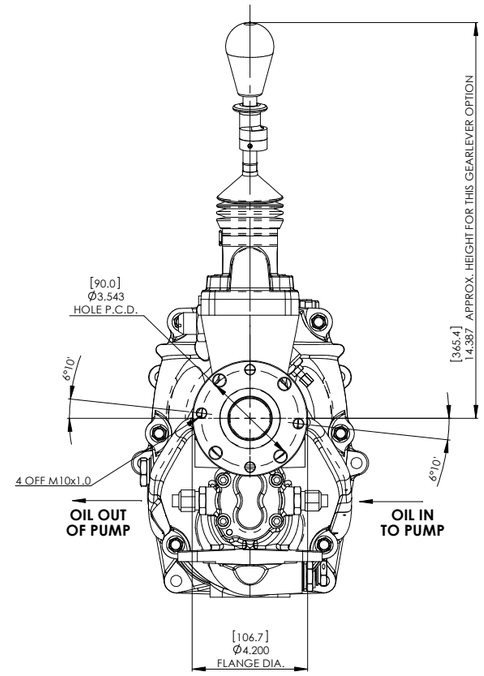

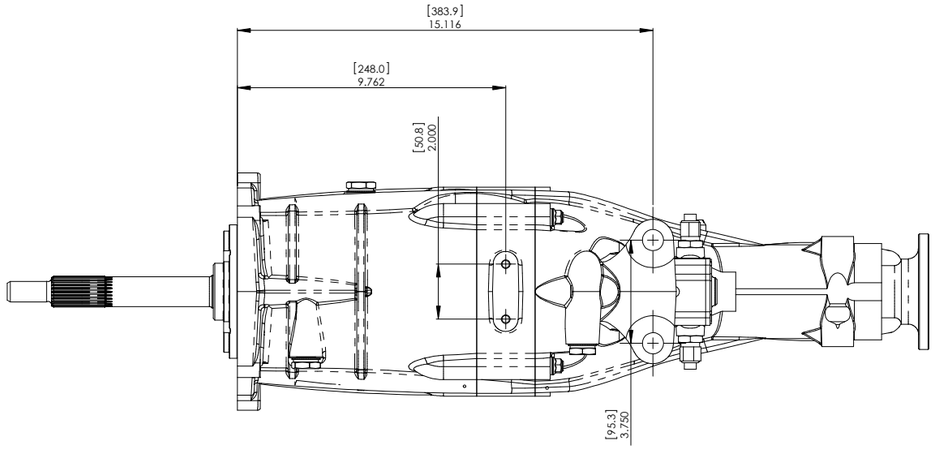

TITLE GENERAL ASSEMBLY	
SCALE 1:2 U.O.S. SHEET 1 OF 2	
Drg. No. E-69G1-01	**Quaife Design & Development.**

FINISH. MACH.	GRIND@G
LIMITS. FRACT. ± 1/64".	
DEC. ± 0.005".	
MATERIAL.	
TREATMENT.	
ISSUE. 01 DATE. 21.11.08	
DRAWN BY. J.P.D.	
IF IN DOUBT, ASK.	
Used In. QUAIFE EXTRA HD INLINE 6 SPEED DOGGED SEQ	

A0[4]border

SOLID WORKS

Drg No. E-69G1-01

REMOVE ALL BURRS AND SHARP EDGES.

THIRD ANGLE PROJECTION.

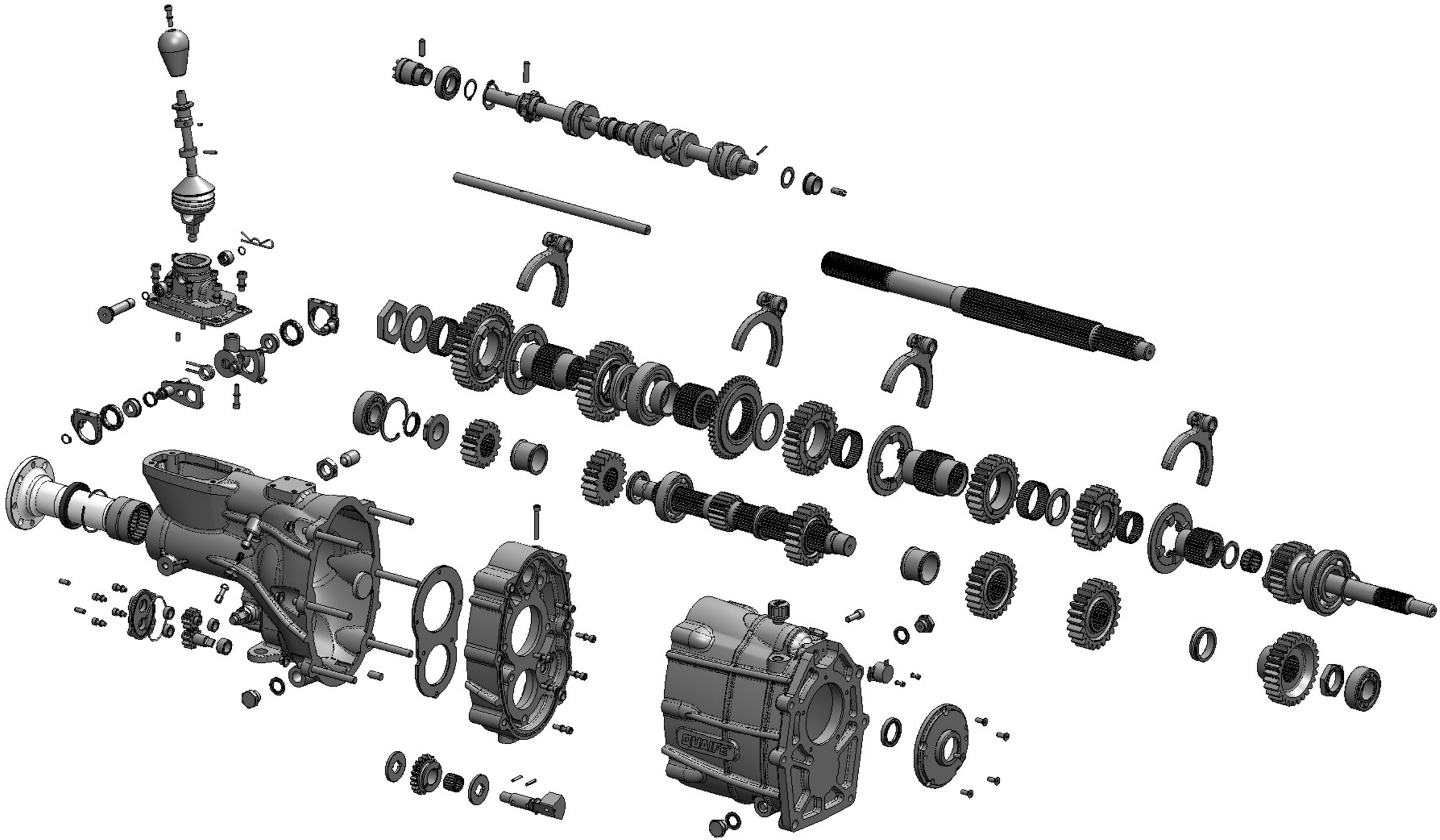

TITLE GENERAL ASSEMBLY

SCALE 1:2 U.O.S. SHEET 2 OF 2

Drg. No. E-69G1-01

A0(4)border

Quaife Design & Development.

FINISH. MACH.	GRIND@G
LIMITS. FRACT. ± 1/64".	
DEC. ± 0.005".	
MATERIAL.	
TREATMENT.	
ISSUE. 01 DATE.21.11.08	
DRAWN BY. J.P.D.	

IF IN DOUBT, ASK.

Used In. QUAIFE EXTRA HD INLINE 6 SPEED DOGGED SEQ

SOLID WORKS