Drg No. E-6C1-01C

REMOVE ALL BURRS AND SHARP EDGES.

THIRD ANGLE PROJECTION.

ITEM NO.	PART NUMBER	DESCRIPTION	QTY.	REV	
1	E-6C1-35	OUTER COVER	1		
2	E-6C1-54	INPUT SHAFT 1st/2nd & REV.	1		
3	E-6C2-21	OUTPUT SHAFT. R5.18:1	1		
4	E-3C1-20	CROWN WHEEL R5.18:1	1		
5	E-6C1-11	INNER TRACK 4th GEAR	1		
6	E-6C1-15	INNER TRACK 1st GEAR	1		
7	E-6C1-99	SPACER 3rd/4th GEAR O/P 2 SPEED KIT	1		
8	E-6C1-100	SPACER 5th GEAR O/P 2 SPEED KIT	1		
9	E-6C1-101	SPACER 5th GEAR I/P 2 SPEED KIT	1		
10	E-6C2-62	1st GEAR O/P SHAFT R2.308	1		
11	E-6C2-61	2nd GEAR O/PUT. R1.688:1	1		
12	E-6C1-13	INNER TRACK 2nd-3rd GEARS	1		
13	E-6C1-14	SPLINED SLEEVE 1st-2nd GEARS	1		
14	E-6C2-44	DRIVE DISC 1st,2nd & REV GEAR	1		
15	E-6C1-29	SELECTOR ROD. 1st-2nd GEAR	1		
16	E-6C1-03	SELECTOR FORK 1st-2nd GEARS	1		
17	E-6C2-20	NUT. L.H. THREAD, O/PUT SHAFT.	1		
18	QDF2B	ATB DIFF (F16, F18 & F20)	1		
19	E-6C1-102	TURRET SPACER 2 SPEED KIT	1		
20	E-6C2-22	OUTPUT SHAFT. R4.85:1	1		ALTERNATIVE
21	E-3C1-25	CROWN WHEEL R4.85:1	1		ALTERNATIVE
22	E-3C1-17	CROWN WHEEL R4.846:1	1		ALTERNATIVE
23	E-6C2-49	CROWN WHEEL R4.20:1	1		ALTERNATIVE
24	E-6C2-23	OUTPUT SHAFT. R4.20:1	1		ALTERNATIVE
25	E-3C1-28	CROWN WHEEL R4.5:1	1		ALTERNATIVE
26	E-3C1-13	CROWN WHEEL R4.2:1	1		ALTERNATIVE
27	E-3C1-29	CROWN WHEEL R4.50:1	1		ALTERNATIVE
28	E-6C2-41	OUTPUT SHAFT. R3.94:1	1		ALTERNATIVE
29	E-6C2-87	OUTPUT SHAFT. R3.55:1	1		ALTERNATIVE
30	E-3C1-24	CROWN WHEEL. R3.94:1	1		ALTERNATIVE
31	E-6C2-90	2nd GEAR O/PUT. R2.071:1	1		ALTERNATIVE
32	E-6C2-89	1st GEAR O/PUT. R2.91:1	1		ALTERNATIVE
33	E-6C2-86	OUTPUT SHAFT. R3.19:1	1		ALTERNATIVE
34	E-6C2-42	OUTPUT SHAFT. R3.55:1 (HELICAL)	1		ALTERNATIVE
35	E-3C1-30	CROWN WHEEL R3.55:1 (HOMOLOGATED HELICAL)	1		ALTERNATIVE
36	E-6C1-95	OUTPUT SHAFT. R3.55:1	1		ALTERNATIVE
37	E-3C1-33	CROWN WHEEL R3.55:1 (HOMOLOGATED)	1		ALTERNATIVE
38	E-6C1-88	INPUT SHAFT CLUSTER	1		ALTERNATIVE
39	280	CIRCLIP - EXTERNAL	1		
40	439	BEARING - ROLLER 38x43x17	2		
41	579	BEARING - BALL 20x42x12	2		
42	785	SELLOCK PIN ∅5x22 LG	2		

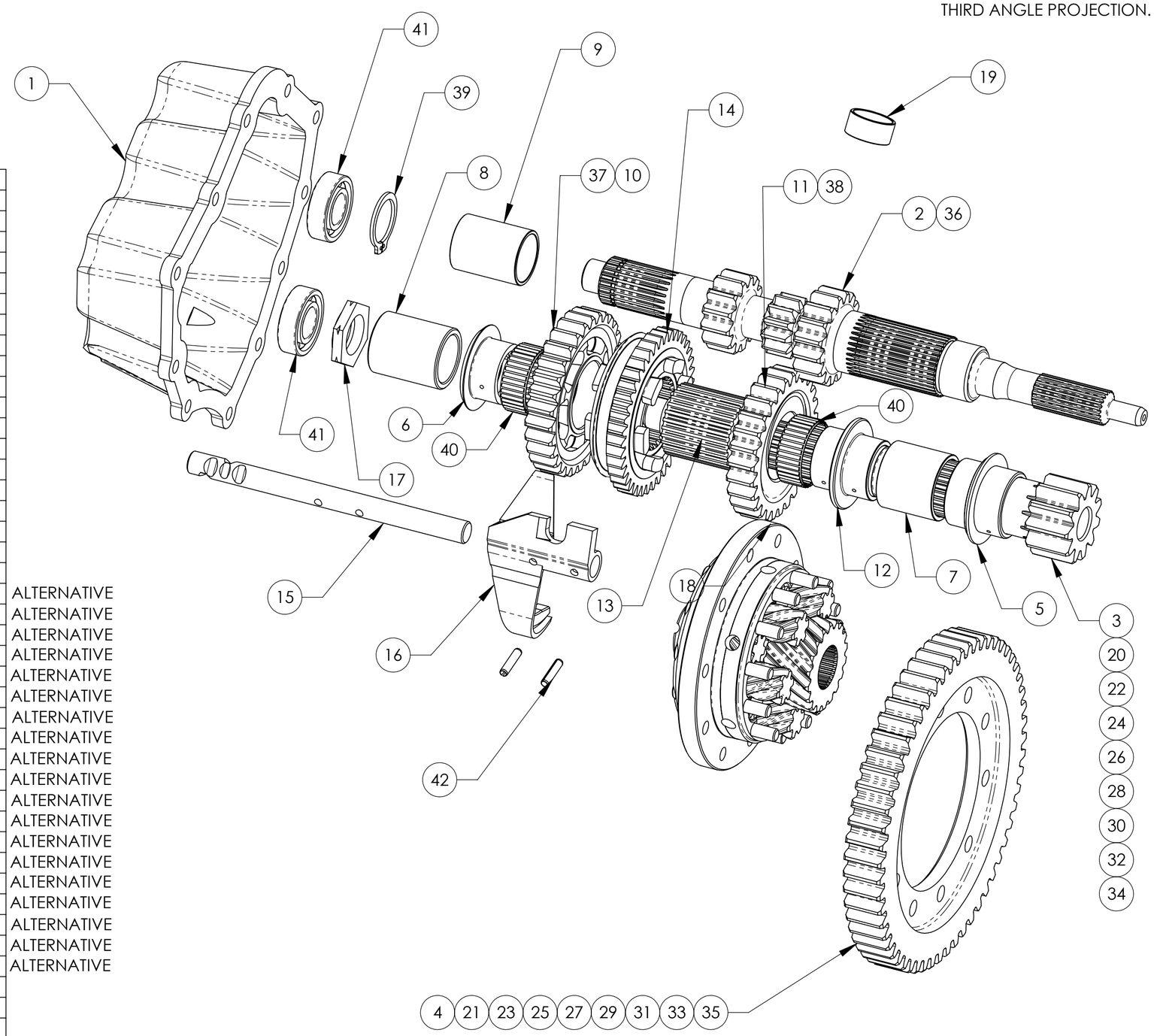

TITLE 2 SPEED CLUSTER

SCALE 1:2 U.O.S. SHEET 1 OF 1

Drg. No. E-6C1-01C

Quaife Design & Development.

IF IN DOUBT, ASK.

THIS DRAWING OR DESIGN IS STRICTLY CONFIDENTIAL & THE COPYRIGHT THEREIN IS THE SOLE PROPERTY OF R T QUAIFE ENGINEERING LTD. AND MAY NOT BE USED COPIED OR EXHIBITED WITHOUT THEIR WRITTEN PERMISSION.

FINISH. MACH, GRIND@G

LIMITS. FRACT. ± 1/64".

DEC. ± 0.005".

MATERIAL.

TREATMENT.

ISSUE. 01 DATE. 6.9.05

DRAWN BY. J.P.

Used In. F16/F18 & F20

A2(4)border

SOLID WORKS