Drg No. QDF7P

REMOVE ALL BURRS AND SHARP EDGES.

THIRD ANGLE PROJECTION.

		INCH	MM
CROWN WHEEL BOLT PCD	D1	5.1181	130.0
No. OF BOLTS		10	10
THREAD / THRO' HOLE		M10x1.25	M10x1.25
CROWN WHEEL SPIGOT DIA	D2	4.2519	108.0
BEARING DIA	D3	A'=1.7716/'B'=1.9685	A'=45.0/'B'=50.0
BEARING DISTANCE	L1	3.5984	91.4
SPIGOT LENGTH	L2	0.7874	20.0
	L2/A	0.7874	20.0
OVERALL LENGTH	L3	5.1732	131.4
BEARING/CROWN WHEEL	L4	0.7953	20.2
BORE	D4	1.1037	28.033
DRIVE SHAFT SPLINE:-			
No. OF TEETH		26	
PITCH		1.0 MOD	
TYPE		FILLET ROOT, SIDE FIT	
PRESSURE ANGLE		45°	

USE BROACH NO 188

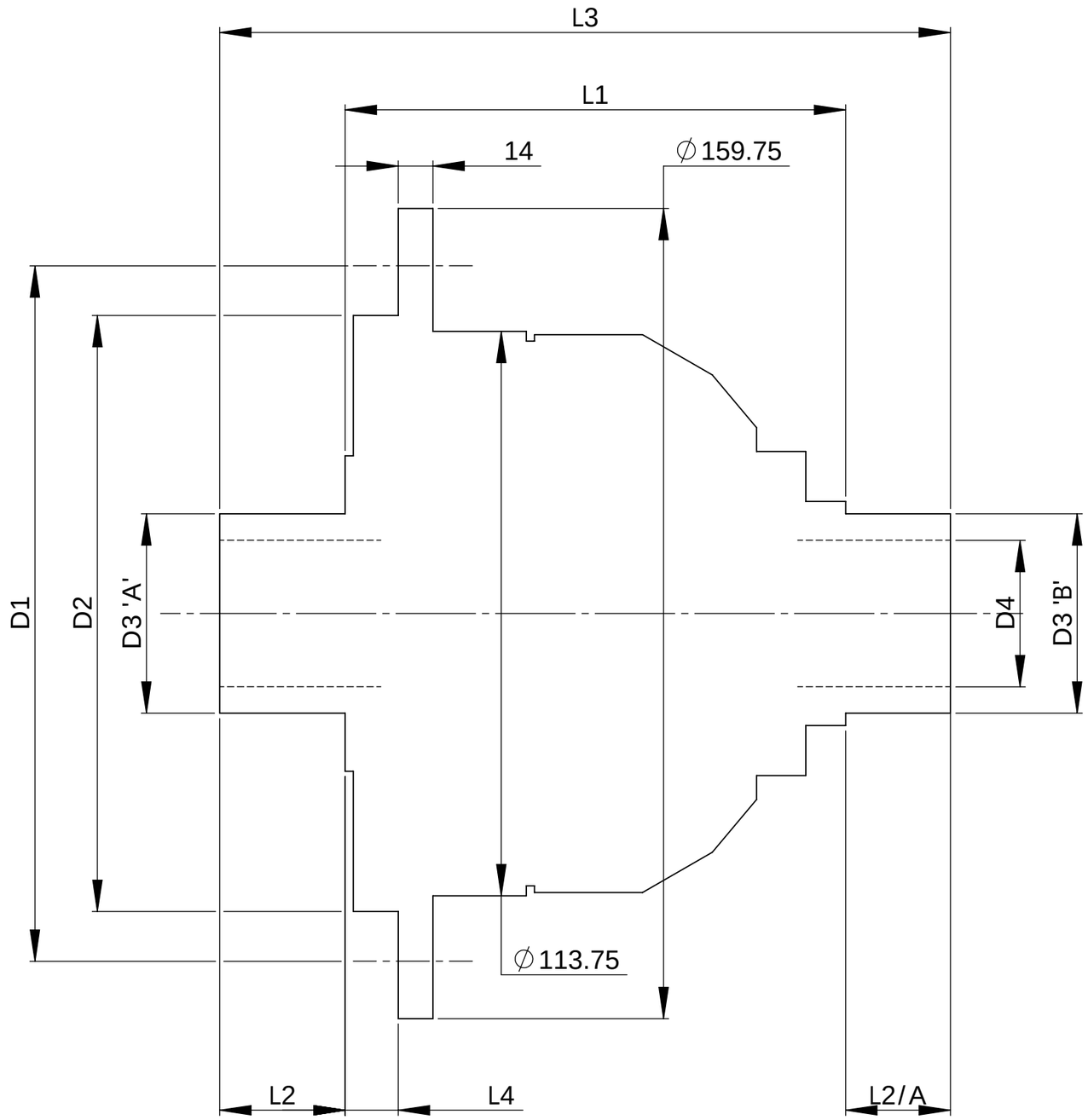

FINISH. MACH,	GRIND@G
LIMITS. FRACT. ± 1/64".	
DEC. ± 0.005".	
MATERIAL.	
TREATMENT.	
ISSUE. 01 DATE. 11/07/2019	
DRAWN BY. J.P.	

TITLE F.W.D. DIFF DATA SHEET.

SCALE 1:1 U.O.S. SHEET 1 OF 1

IF IN DOUBT, ASK.

Drg. No. QDF7P

Quaife Design & Development.

THIS DRAWING OR DESIGN IS STRICTLY CONFIDENTIAL & THE COPYRIGHT THEREIN THE EXCLUSIVE PROPERTY OF R.T QUAIFE ENGINEERING LTD, AND MAY NOT BE USED COPIED OR EXHIBITED WITHOUT THEIR WRITTEN PERMISSION.

Used In. SUZUKI SWIFT 1.4T

A3(4)border

SOLID WORKS